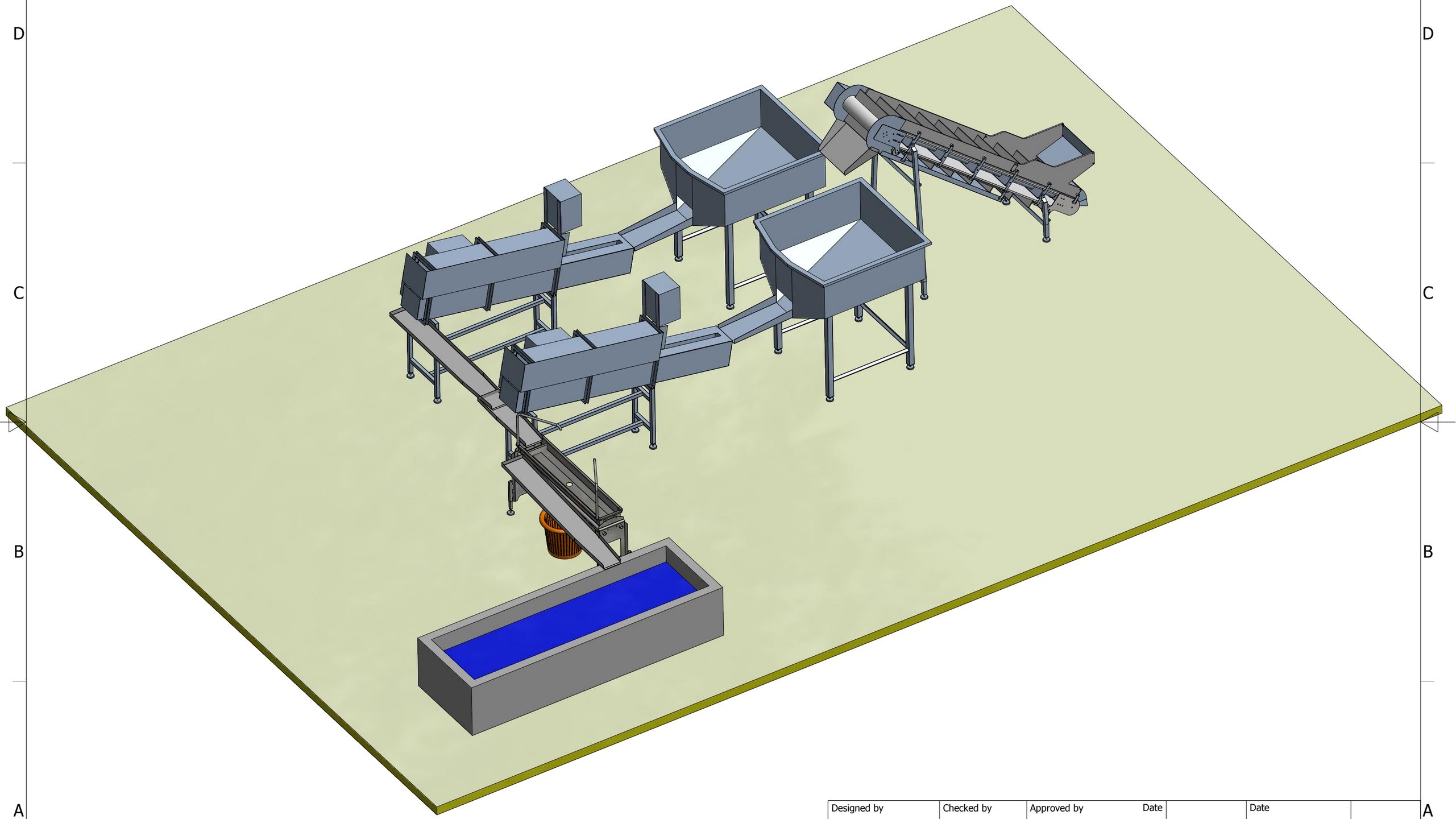

Designed by	Checked by	Approved by	Date		Date	
Peder					11-12-2013	

Boleto

Layout line 1	Edition	Sheet
		1 / 2

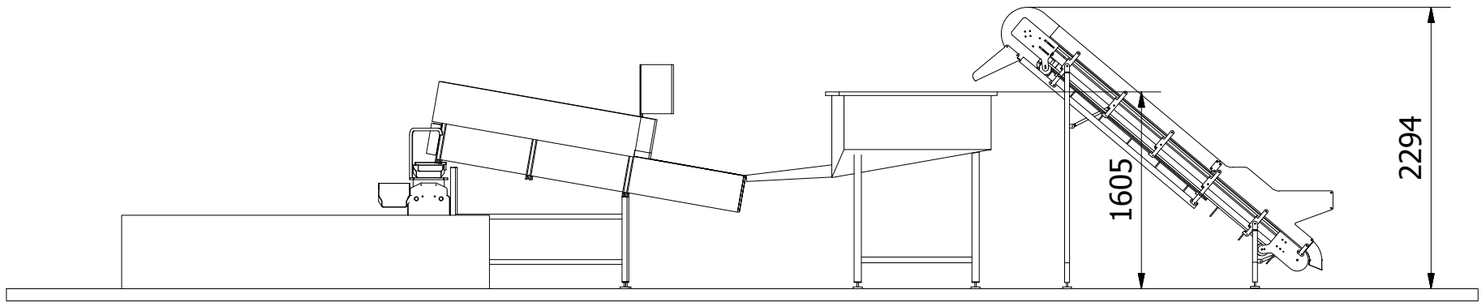

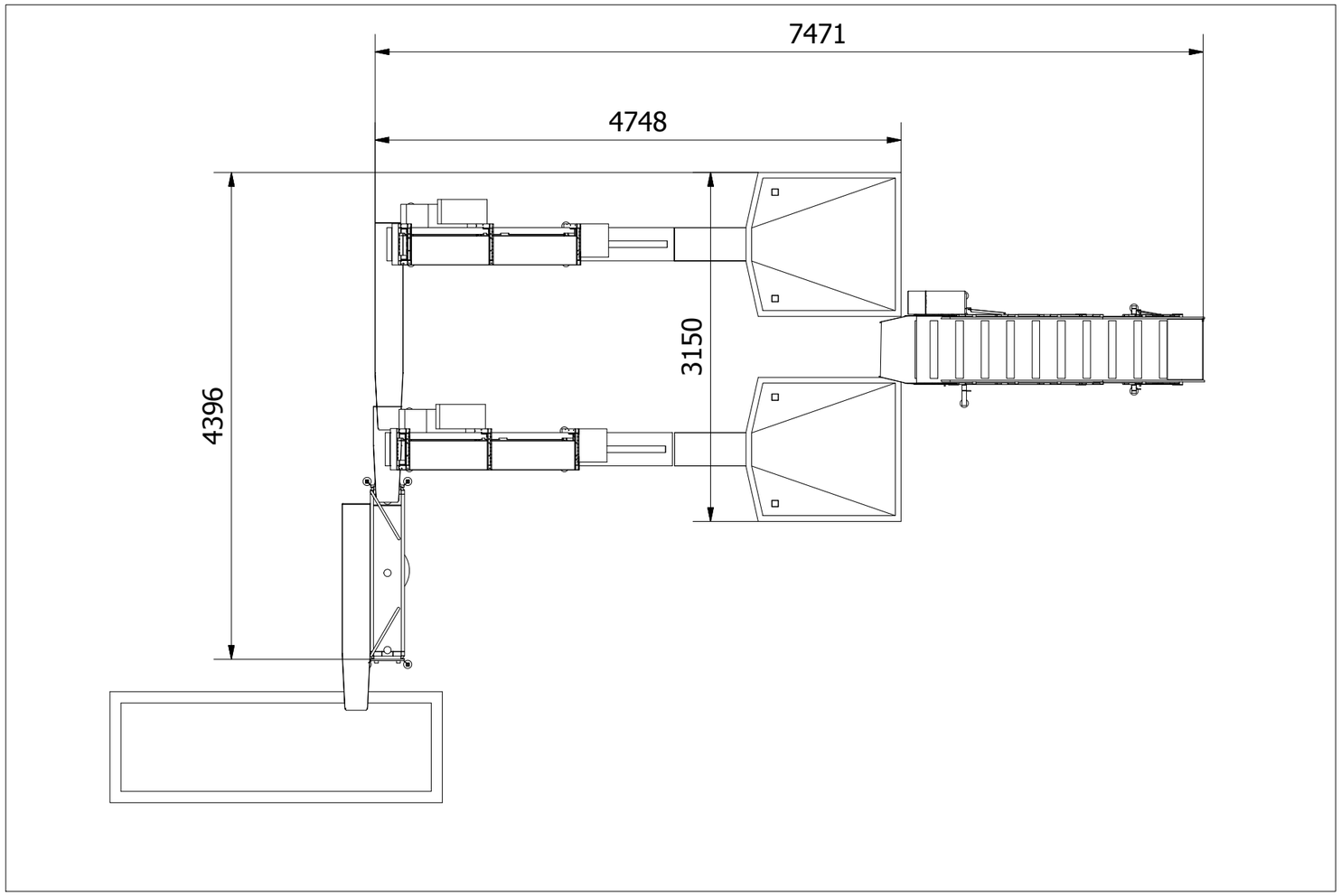

Designed by	Checked by	Approved by	Date		Date	
Peder					11-12-2013	

Boleto

Layout line 1	Edition	Sheet
		2 / 2